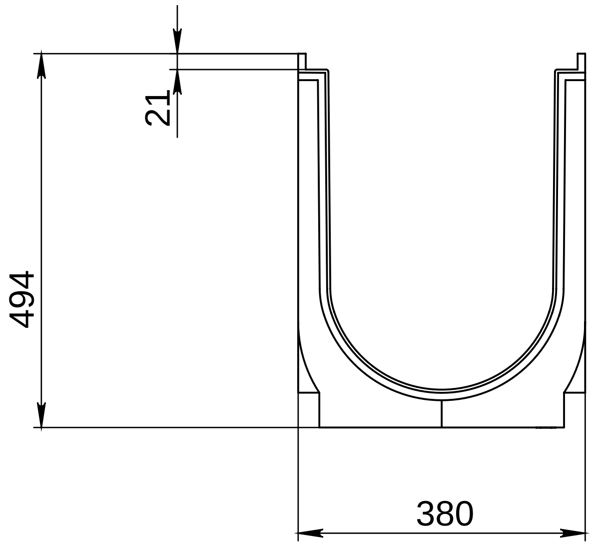

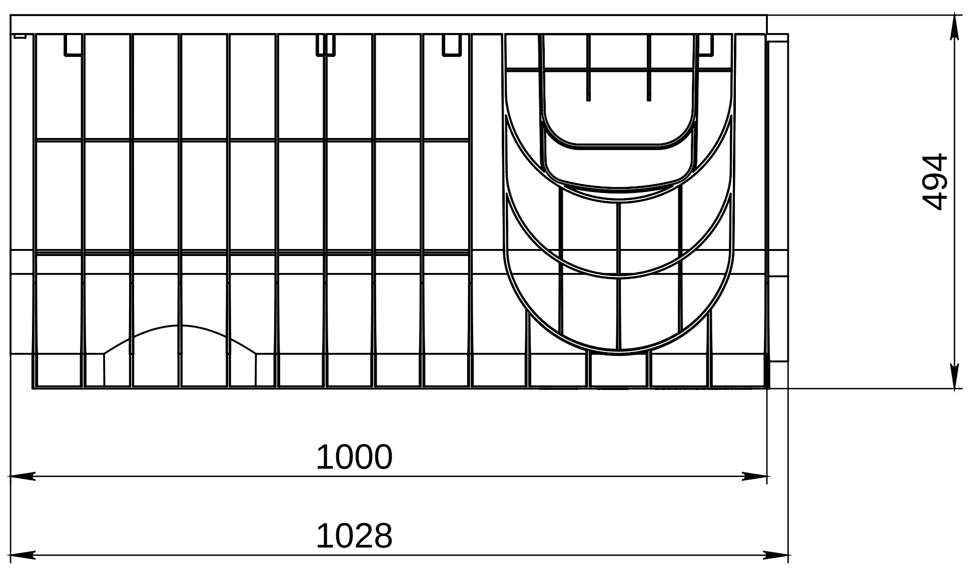

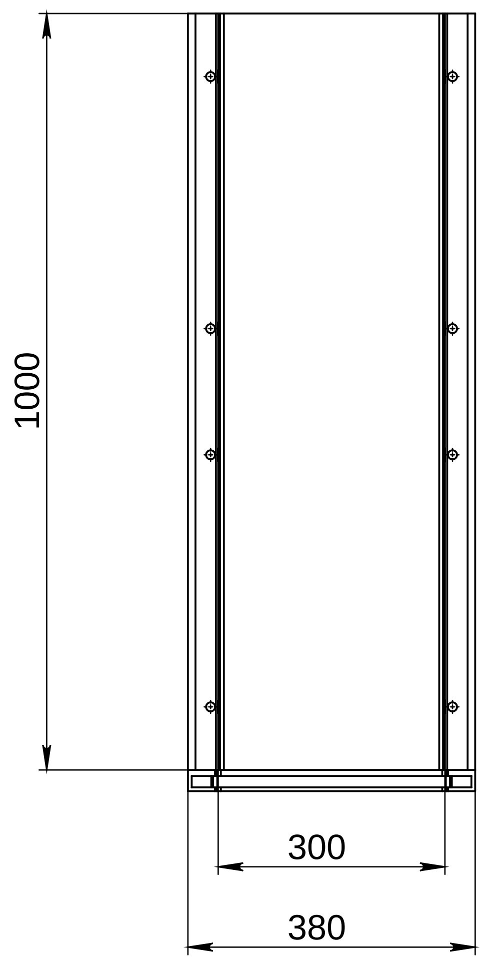

ЍφȻ, 612npm

Egbpmjga_